JILONG
Since 1993

500E+

FTTx Fusion Splicer



Light weight & Compact

Suitable for working at height

Tool–free Electrode Replacement

Fully Automatic Splicing & Heating

CE

EMC


JILONG
500E+
14:31
Pause 1
X
Y
L:1.69°/OK
-0.25°
R:0.90°/OK
Since 1993
FUSION SPLICER
Serial Number:
465878920536

Feature Description

- Efficient, versatile, lightweight & portable
- Working platform design for aerial work
- Special 3–in–1fiber holder
- Support 220 times of splicing + heating when fully charged
- Electrode life around 5000 times(Replaceable)
- Automatic splicing & automatic heating
- Innovative tool–free electrode replacement

Main Features



Durable ceramic
fiber pressure heads



Mirror-free design: faste
response, easier
maintenance

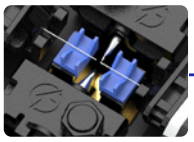

Special designed V-groove

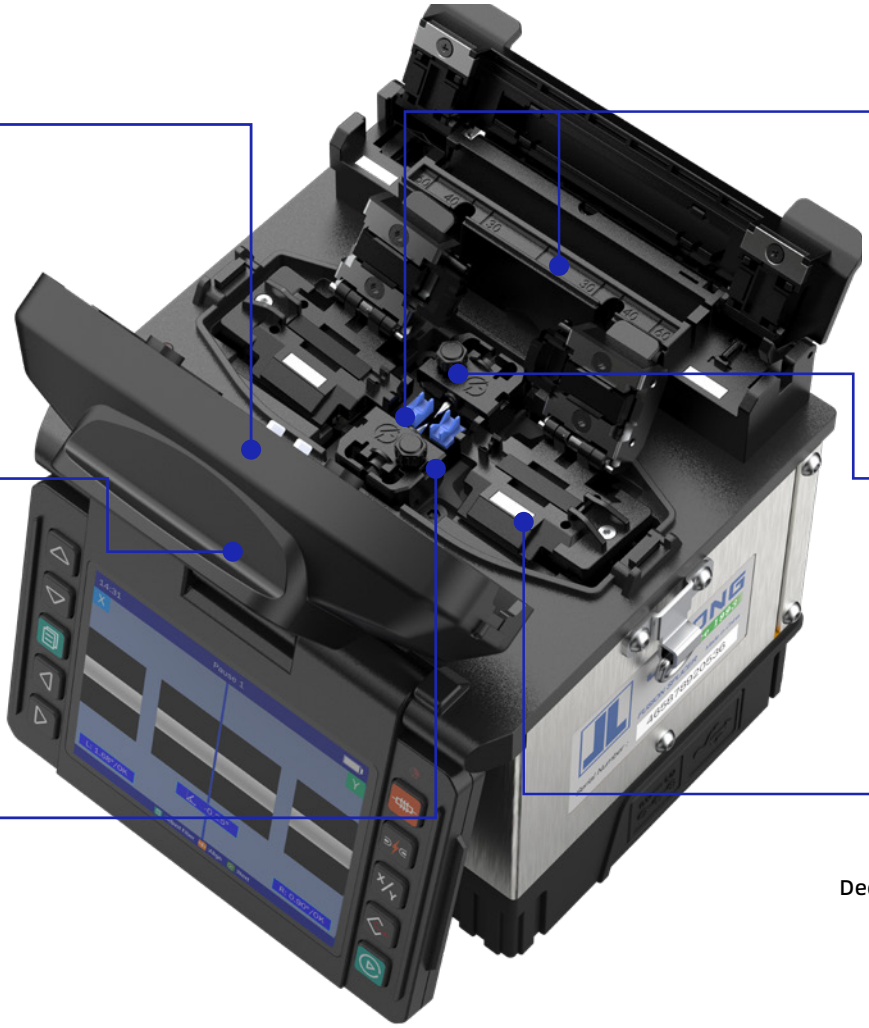



Fast-splicing 8s
Fast-heating 18s



Tool-free electrode
replacement: simply twist
to replace the electrodes



Dedicated 3-in-1 fiber holder

3–IN–1 Fiber Holder

Fiber holder suitable for Bare Fiber/ 3.0mm, Jump Fiber/ Pigtail
and Fiber/Rubber–insulated fiber cable



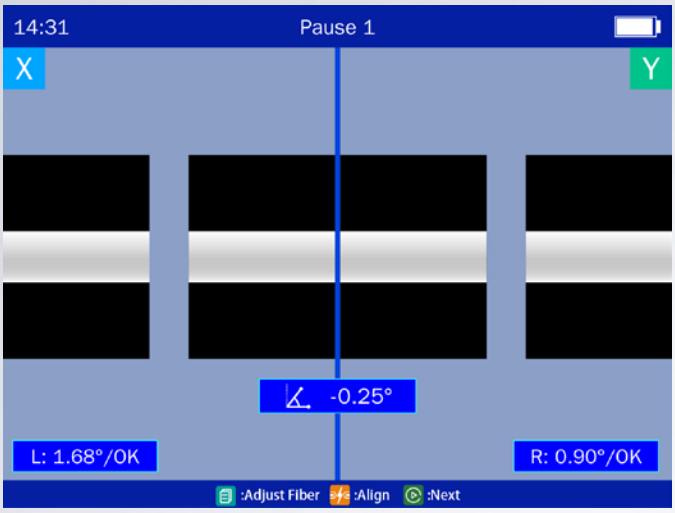

Fast–splicing
8s

Fast–heating
18s



Working platform designed for work at height

Highly adaptable to the working environment: it is built for work at height, and performs equally well in any conventional ground-level working environment.

Installation completion effect

Rich expansibility

fiber optic cleaver operating platform (Optional)

Support the placement of cleaver operating platform, do cleaving and splicing work in one step
(Operation platform be ordered separately)

Invention patent application number 202210544729.X
Utility model patent application number 202221202906.8



*Operation platform be ordered separately

Installation instructions of fiber optic operating platform

Step 1:
Install the fixing plate behind the fusion splicer with screws (M3/ M4/ M5).

Step 2:
Insert the support plate into the fixing plate and tighten the fixing screws.

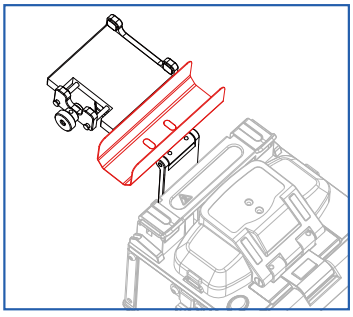

Step 3 :
Place the cooling tray in the corresponding position of the support plate, and the installation is completed.

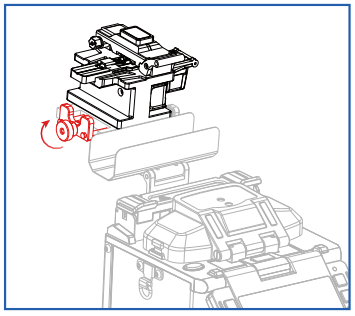

Step 4 :
After placing the fiber cleaver on the operating platform, adjust the depth of the screw so that the rubber pad fits the cleaver completely.

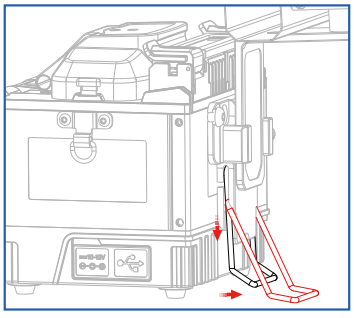

Step 5 :
Pull the bracket vertically to the bayonet, and then pull it horizontally to support the machine on the table.

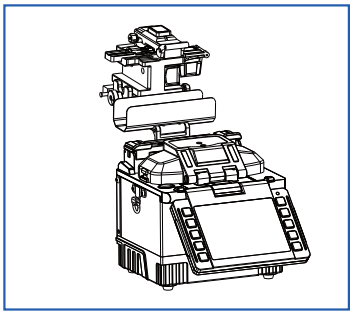

Step 6 :
Now, the bracket installed on the fusion splicer for placing the cleaver and the cooling tray is installed.

Specification

Splice Method :	Active Clad–Alignment
Applicable Fibers :	SM(ITU–T G.652&G.657) / MM(ITU–T G.651) / DS(ITU–T G.653) / NZDS(ITU–T G.655)
Compatible Fiber/Cable :	0.25~3.0 mm / indoor flat cable
Fiber Holder :	Replaceable
Fiber Diameter :	Cladding: 80–150μm, Coating: 100~1000μm
Fiber Cleave Length :	8~16 mm
Splice mode :	Max 128 modes
Typical Splice Loss :	SM: 0.03dB / MM: 0.01dB / DS: 0.04dB / NZDS: 0.04dB / G.657: 0.03dB ★①
Return Loss :	>>60dB
Splicing Time :	SM Quick mode : 8 sec / SM Average: 10 Sec
Estimated Splice Loss :	Available
Heating Time :	Quick mode 18 sec.(SM G652 250μm 40mm Sleeve) adjustable★②
Protection Sleeve Length :	20mm, 30mm, 40mm, 50mm, 60mm
Heat Programs:	Max 32 modes
Battery :	4000mAh Battery Capacity, Typical 220 Cycles (Splice&Heat) per Charge ★③
Electrode Life :	5000 arcs (replaceable) ★④
Auto–start :	Splice / Heating
Results Storage :	The last 10,000 splice records and 2,000 result images
Tension Test :	1.96~2.25N
Operating Condition :	Altitude: 0~5000m, 0~95% relative humidity, –20~50˚C, Max Wind 15m/s
Storage Condition :	0~95% relative humidity, –20~60˚C
Display :	3.5” color high resolution (800 x 480) display
Fiber Magnification :	X, Y, XY, X/Y : 320X Magnification
Power Supply :	AC Input 100–240V~50/60Hz 2.0A, DC Input 14.0V⎓4.0A
Terminal :	USB2.0
Weight :	1.06kg without battery / 1.35kg with battery
Size :	130H x 113W x 126D mm

★① With identical fibres(in room temperature). Measured by cut–back method relevant to ITU–T and IEC standards.

★② 0.25mm fiber,may vary depending on the battery status and operating environment.

★③ Splice & Heat cycles based on 40mm shrink tube.

★④ Electrode life may vary depending on the operating environment.

Product Display







Packing List

ARC Fusion Splicer	×1
High Precision Fiber Cleaver KL-22F	×1
Power adapter	×1
Compact carrying case	×1
Cooling tray	×1
Spare electrodes (pair)	×1
Fiber Stripper	×1
Splice Pretection Sleeves (pcs)	×100
Alcohol Bottle	×1
Scissors + Brush (set)	×1
Inspection Certificate	×1
Calibration Certificate	×1
Quick Reference Guide	×1
Brochure of JILONG	×1
Brochure of TAWAA	×1



Contact us

HEAD OFFICE: Nanjing Jilong Optical Communication Co., Lt

Add: Room 401-402, Building 14-1, Xingzhihui Business Garden, No.19 Xinghuo Road, Pukou District Nanjing, Jiangsu, 210032, China

Web: www.JILONGOT.com

Mail: info@jilongot.com

TEL: +86 25 58880885

Focus on official website for more